PRODUCT SHEET

Outdoor Lockable Showcase Slim 12 x A4

SCTE12xA4PH

- **IP56 certified fully weather resistant**
- **Slim and elegant look**
- **With white magnetic back wall**
- **Fire protection certificate B1 DIN 4102**

PRODUCT SHEET

Outdoor Lockable Showcase Slim 12 x A4

SCTE12xA4PH

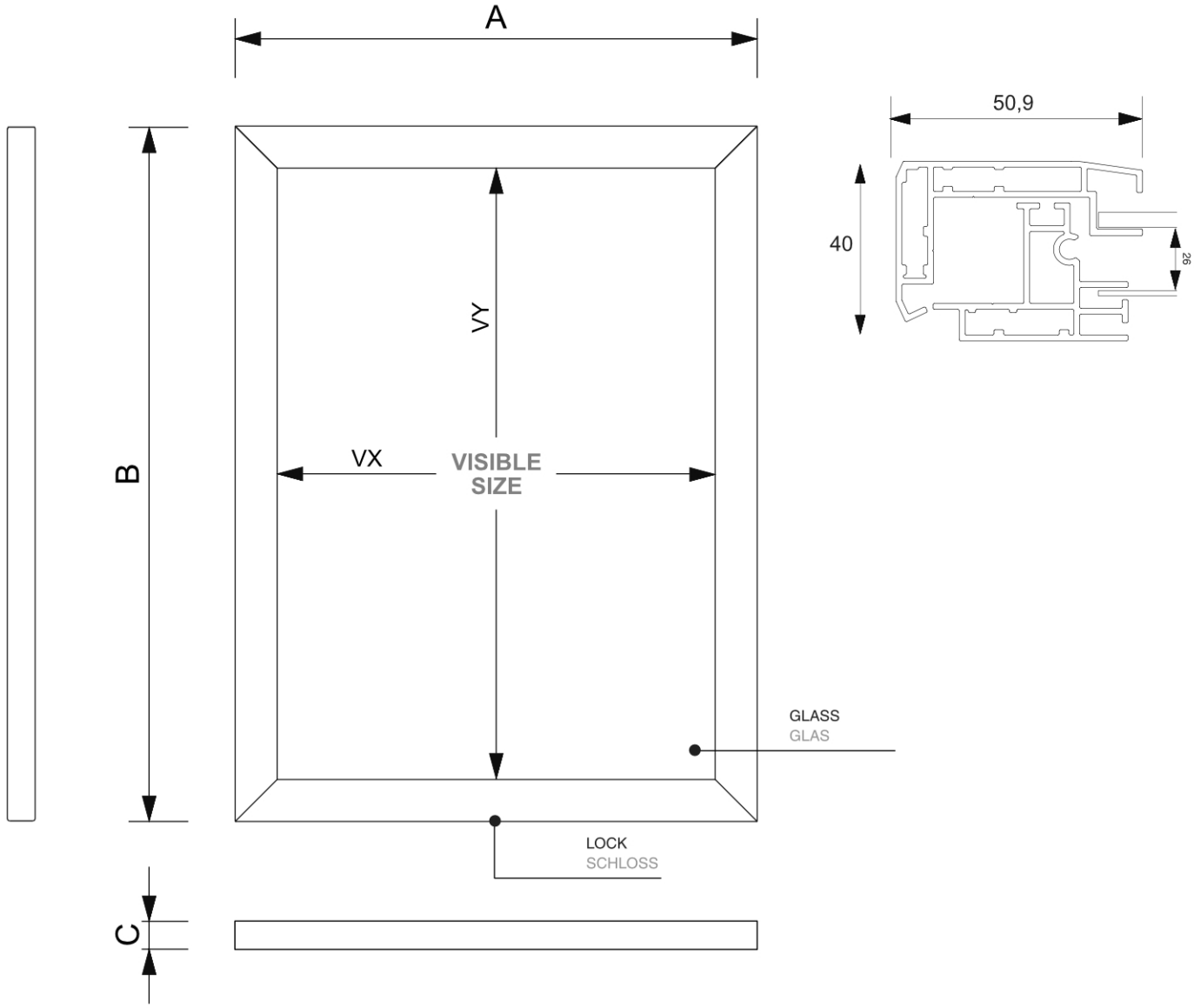

ACCESSORIES
ZUBEHÖR

(SETFIXWB)
MARKER PENS
BOARDMARKER

(STARTERKIT)
STARTERKIT
STARTPACKUNG

(MAGNETS)
MAGNETS
MAGNETE

(WBERASER)
ERASER
TAFELSCHWAMM

(WBCLEANER)
SPRAY CLEANER
REINIGER

PRODUCT SHEET

Outdoor Lockable Showcase Slim 12 x A4

SCTE12xA4PH

GENERAL INFO

SKU	Sizes (mm) (A x B x C)	Format (mm)	Visible size (mm) (VXxVY)	Hole spacing (mm) (XxY)
SCTE12xA4PH	970 x 1012 x 40	12xA4	868 x 910 mm	-

Orientation	Weight (kg)
Vertical	19,40

ELECTRICAL INFORMATION

Illumination	Lighting colour (K)	Luminosity (cd)	Light intensity (lx)	Wattage (W)
No	-	-	-	-

PACKAGING INFORMATION

Packaging unit 1 (mm)	Packaging unit 2 (mm)	Packaging unit 3 (mm)
1115 x 1120 x 100	-	-

Palette number of pieces	Palette weight (kg)	Palette type
8	192	EUR

ADDITIONAL INFORMATION

Product certifications	EAN
IP56, DIN4102B1	8596052167942